Chapter 6 – Bluetooth

Lecture Mobile Communication

Oliver P. Waldhorst

Outline

WLAN, Bluetooth

GSM, UMTS, LTE, 5G

Mobility Management

Medium access

Wireless transmission

Introduction to Bluetooth

Motivation WPANs

- WPAN – Wireless Personal Area Network
  - Networking of devices in a relatively small spatial area around one or more people
- Examples

WPAN in office environment to connect multiple fixed and mobile devices

WPAN in the home environment for networking various devices and sensors

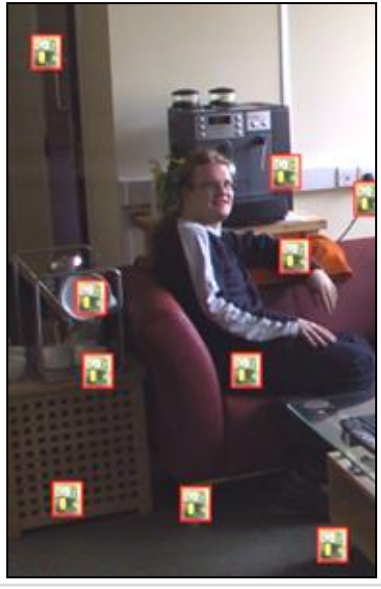

[6.7]

Design Goals for WPANs

- Worldwide operation
  - Operation possible without special permits or licenses
- Robust transmission technology
  - Interference from other technologies in same frequency band
- Limited transmission range
  - Communicating devices usually cannot have a large spatial distance (usually up to a few 10 meters)
- Point-to-point communication
  - Missing or limited multipoint-to-multipoint capability
- Low power consumption due to battery operation
  - Mechanisms for saving energy are of great importance
  - Low transmission power and thus limited range
- Cost-effective hardware design
  - Mass products at low prices

Various WPAN technologies

- Many technology proposals
  - Partially standardized by IEEE (802.15.x)

- Standardized technologies e.g.
  - Bluetooth (partially 802.15.1)
    - Considered here: Bluetooth Classic
  - ZigBee (partially 802.15.4)

Bluetooth

- Association of industrial partners
  - In 1998, the companies Ericsson, Nokia, IBM, Intel and Toshiba merged to form the Bluetooth Special Interest Group (Bluetooth SIG).
  - Ericsson had been pursuing the ideas since about 1994
- Objective
  - Development of a cost-effective standard for radio transmission over short distances
  - Price of Bluetooth chips should be a few dollars in large series
    - Cost-effective mass production

Miscellaneous Bluetooth devices

[6.3]

… to the naming

- After Harald I, Viking King of Denmark, 911-970, called ”Blåtan” (”Blue tooth”
  - Rumor has it that he suffered from a chronic illness that turned his teeth blue...
  - Christianized Denmark
  - United the people of Denmark

- Bluetooth unites communication between different small devices
  - Mobile phones, PDAs, Sensor etc.
- Bluetooth-Logo
  - Contains the "H" and "B" runes

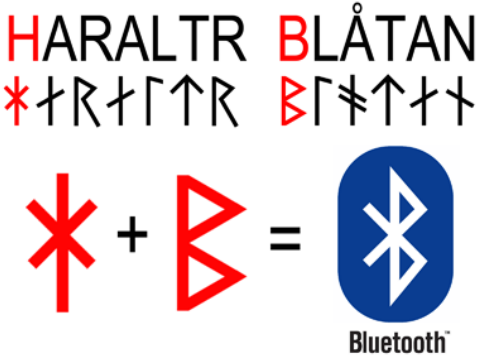

[6.11]

Use Cases (1)

- Exchange of business cards
  - PDA sends business cards to PDAs of business partners

- Requirements
  - Wireless transmission
  - No pre-configuration, easy to use
  - Low bandwidth
  - Short range
  - Energy-saving, as battery operation

Use Cases (2)

- Wireless Headphones
  - Communication between mobile phone and headphones

- Requirements
  - Robust communication
  - Good (audio) quality
  - Security against eavesdropping, authentication and encryption
  - Short range
  - Energy-saving

Use Cases (3)

- Transferring photos to the photo printer
  - Communication between mobile phone or compact camera and photo printer

- Requirements
  - Wireless transmission
  - Error-free transmission
  - Automatic configuration
  - Authentication, access protection
  - Short range
  - Energy-saving

Examples of Bluetooth devices

Bluetooth requirements

- Use cases lead directly to important requirements for Bluetooth

- Automatic configuration
  - Finding devices within communication range
  - Configuration of Bluetooth Networks
  - Discovering services the devices offer

- Support different application requirements in terms of quality of service and reliability
  - Guaranteed quality of service for voice communication between two devices
  - Variable Quality of Service Parameters

- Wireless Communications Security
  - Authentication and encryption services

Network architecture and data transmission

Transmission/Network Architecture

- Operation on license-free ISM band (2.4 GHz)
  - Division into 79 channels (until 2001 only 23 in France, Spain and Japan)
  - Shares medium with e.g. WLAN or microwaves
    - Frequency hopping method for band spreading ➔ very robust

- Data rate (Bluetooth 1.1)
  - max. 1 Mbit/s nominal (723 kbit/s effective)

- Three different classes:

Feature	Class 1	Class 2	Grade 3
Range	100 m	10 m	10 cm
Output power	100mW	2.5 mW	1 mW
Frequencies	2400-2483,5 MHz (ISM-Band)		
Data rates	max. 1 Mbit/s nominal (723 kbit/s effective)		

Network Architecture

- Piconets
  - Building block
  - 1 master
    - distributes broadcasting rights to the slaves
  - 1 to 7 slaves
    - Can only communicate with each other via the master
    - No direct communication between slaves possible
  - Each device in the Piconet is either master or slave
    - Device that establishes a piconet will first automatically become the master
    - Master can change during operation

Sketch of a piconet

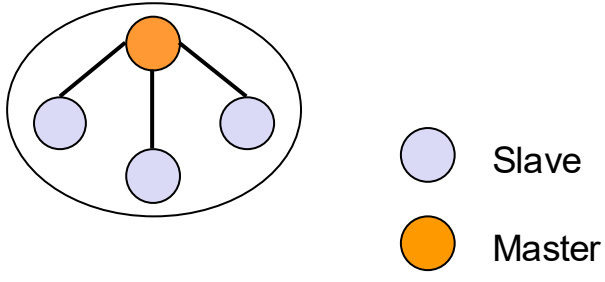

Network Architecture

- For larger nets: Scatternet
  - Union of several piconets
    - Exactly 1 master per piconet !
  - 1 node can…
    - …be a slave in several piconets..

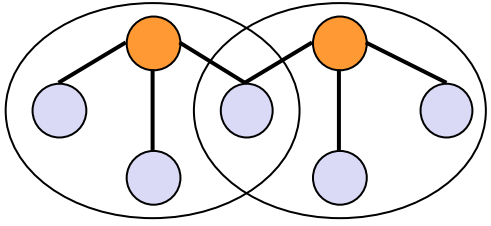

    - …but only act as a master in a single piconet

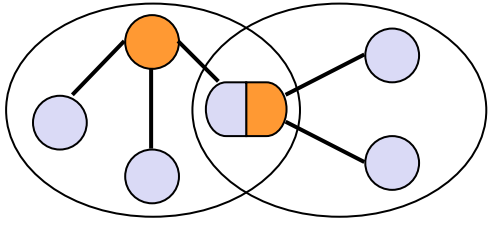

Slave in one piconet and master in another

Medium Access: Master Controls Transmission

- Use of Time Division Duplex (TDD) - Variant of TDMA
  - Transmission works in time slots
    - Length of data units is typically a time slot
    - Optional: data units with length of 3 or 5 time slots
  - Time slots are used alternately by master and slave
    - Master uses odd time slots, slaves use even time slots
    - Slave is not allowed to respond until polled by Master
      - No collisions (Centrally Controlled Access)
  - Master can alternately send data to different slaves

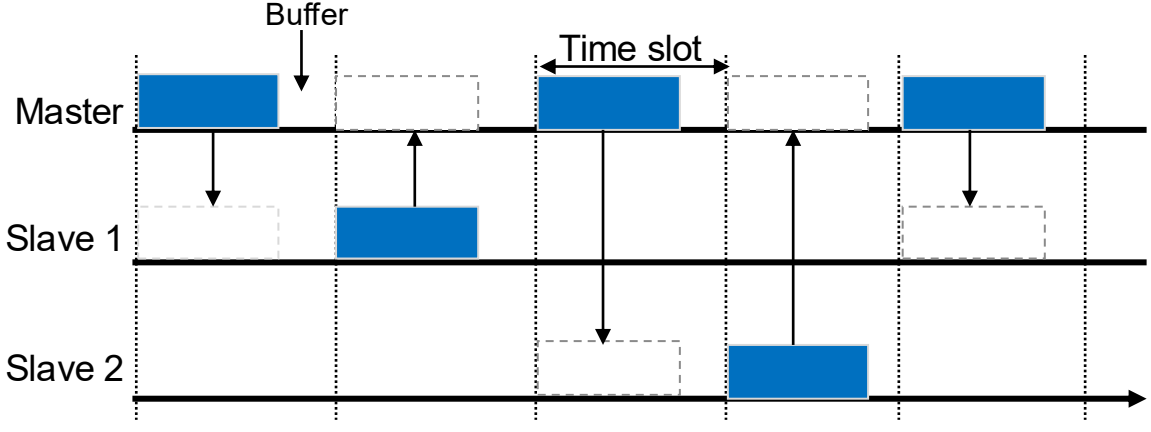

Spectrum spreading: FHSS

- Goal: Robust communication between Bluetooth devices
  → Spectrum spreading based on <u>frequency hopping spread spectrum</u>
  - Frequency changes between time slots or between data units
    - Frequency changes after each data unit
    - For data units that are longer than one time slot, frequency is maintained
      - The original scheme is retained
      - With a data unit of 3 time slots, the frequency f_k at the beginning of the transmission is then changed to the frequency f_{k+3}
      - Advantage: All stations can stick to their usual sequence and do not have to be informed about the transmission of longer data units.
  - Frequency of frequency changes: 1600 times per second
    - One time slot takes 1/1600 s = 625 µs

- Advantage
  - Individual interfered frequencies do not interfere with the entire transmission
  - From Bluetooth 1.2 onwards, adaptive frequency hopping has been further improved
    - Adaptation to disturbances

Implementation of Frequency Hopping

- Problem: What sequence of frequencies is used?

- Master and slave must be synchronized, i.e.
  - same sequence of frequencies and
  - same phase within the sequence

- Sequence is determined by the master
  - The sequence of frequencies (hopping sequence) is a pseudo-random number sequence
  - Jump sequence calculated from the hardware address of the master
  - Phase within the sequence determined by the master's clock
    - This means that master and slave know the same current frequency

- The jump sequences in different piconets must differ
  - … Master cannot act in two or more piconets, but is limited to one!

Synchronization in scatternets

- To follow the hopping sequence, each slave must know the clocks of all his masters

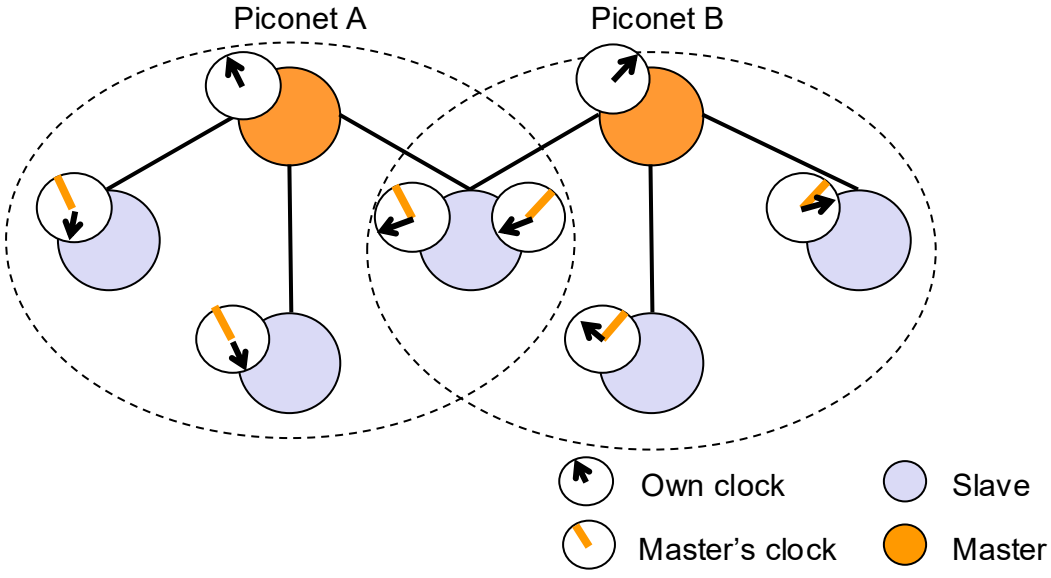

- Problem of different hopping sequences: A slave can only be active in one piconet at a time
  - Logging out in the old piconet
  - Logging on to the active piconet

[6.8]

Joining a Piconet

How are piconets created?

- Construction of piconets in two phases:
  - Discover the devices within transmission range
    - Process: Inquiry Procedure
    - Getting to know the device addresses and clocks
  - Inviting a (already known) device to join the piconet
    - Process: Paging Procedure
    - Establishing connections, assigning addresses in the piconet, ...

Inquiry Procedure

- Task: Discover other devices within transmission range

- Problems
  - New devices don't know the master, so they don't know the jump sequence and phase!

- Approach
  - Devices follow dedicated inquiry jump sequences
    - Consist of 32 frequencies
      - Are known to all devices even without membership in a piconet
    - All devices listen to subset of 16 of these frequencies with their special sequence
      - Sequence is determined by device hardware address

- Searching and listening devices use different frequencies of jumping
  - Searching device sends inquiry data units rapidly
    - Selects a new frequency every 312.5 µs, i.e. 2 inquiry data units per time slot
  - Listening devices select a new frequency every 1.28 s
    - Listen there for 18 time slots each, i.e. 11.25 ms

- Listening devices respond with their hardware address, clock, and device class, among other things
  - This makes later paging faster

Paging procedure

- Task: A device is invited into a piconet

- Prerequisites
  - Hardware address of the device to be invited is known
    - … solved by inquiry procedure
    - Known clock speeds up paging procedure

- Approach
  - Inviting device calculates hopping sequence from device address of device to be invited
    - Consists of 32 frequencies
  - Inviting device calculates phase from (estimated) clock of the device to be loaded
    - Clocks always "drift apart" a bit
    - If time (and thus phase) is misestimated, then "after" or "before" is searched in phase(s)
  - Both devices use different changing speeds for the jump sequence
    - Inviting device selects a new frequency every 312.5 µs and sends paging data units
    - Invited device selects a new frequency every 1.28 s, listens there for 11.25 ms
  - The inviting device becomes the master of the connection

Bluetooth protocol stacks and versions

Protocol Stack

- Core Specifications
  - Physical layer and link layer protocols
    - Rules Access to the wireless communication medium (see above)
    - Divided into the layers "Radio" and "Baseband"
  - Link Manager Protocol (LMP)
    - Management of physical links
    - Controls pairing and encryption for a link
    - Synchronizes clocks
    - Performs master-slave role changes
    - Adjusts transmitting power
  - Logical Link Control and Adaption Protocol (L2CAP)
    - Provides multiple channels per physical link
    - Segmentation and reassembly of large data units
    - Ccontrols quality of service
- Profile Specifications
  - Protocols and functions to adapt to use cases and applications

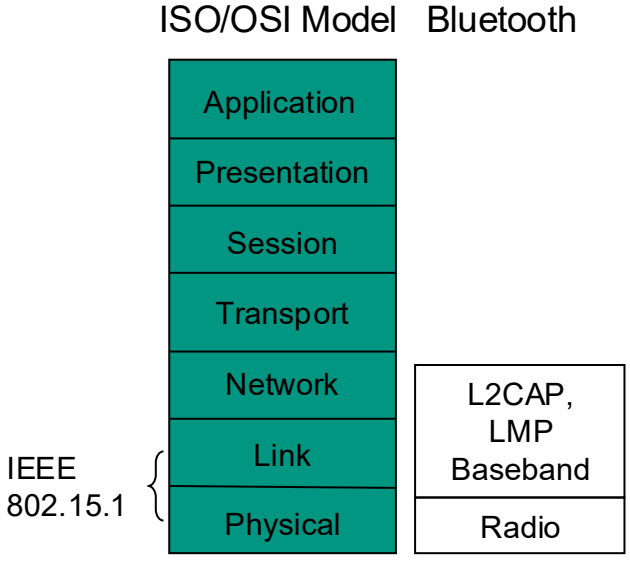

Other Protocol Stack Elements

- SDP (Service Discovery Protocol)
  - Search for services from other devices
  - Determination of service parameters (e.g.: L2CAP PSM, RFCOMM Channel)
  - Standardized services are described in profiles

- RFCOMM
  - Emulation of serial ports
  - Usually the basis of other protocols (OBEX, PPP, ...)

Log stacks at a glance

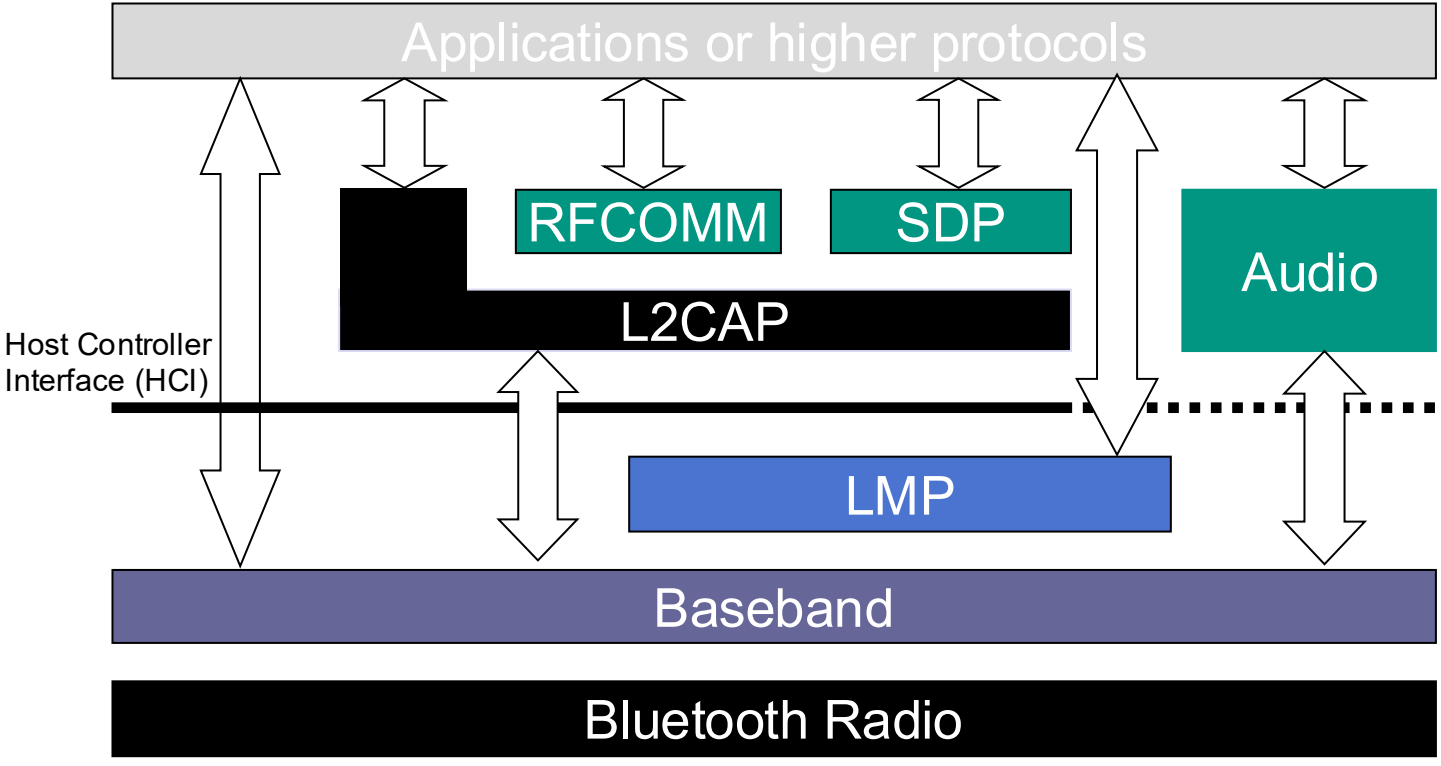

LMP Connection Types (1)

- Synchronous Connection-Oriented Link (SCO)
  - Symmetrical, point-to-point, only between master and a slave
  - Data rate always 64 kbit/s (e.g. voice connections)
  - Master reserves time slots at fixed intervals
  - Different types possible – difference lies in forward error correction (FEC)
    - *High Rate Voice 1 (HV1):* FEC with 1/3 code rate, one time slot is reserved every 2 time slots
    - *HV2*: FEC with 2/3 code rate, one time slot is reserved every 4 time slots
    - *HV3*: without FEC, one time slot is reserved every 6 time slots
  - This means that transmission is possible even in the event of severe interference

LMP Connection Types (2)

- Asynchronous Connectionless Link (ACL)
  - Point-to-multipoint, master polls multiple slaves
  - symmetrical or asymmetrical
    - Data rates up to 721 kbit/s
  - Different types
    - *Data Medium Rate x (DMx)*: FEC mit 2/3 Code-Rate; *Data High Rate x (DHx)*: kein FEC
    - X stands for the number of consecutive time slots that a data unit may occupy (up to 5)
    - There is no frequency change between these time slots

Operating Modes

- Low-power modes can be enforced by master:
- SNIFF
  - Device sleeps periodically and listens for poll requests from the master at longer intervals (intervals are variable)
  - Device remains active part of the piconet (retains Active Member Address)
- HOLD
  - Device sleeps once for "hold time"
  - Device remains active part of the piconet (retains Active Member Address)
- PARK
  - Device no longer an active part of the piconet (receives Parked Member Address)
  - Preservation of synchronization through beacons sent at long intervals from the master

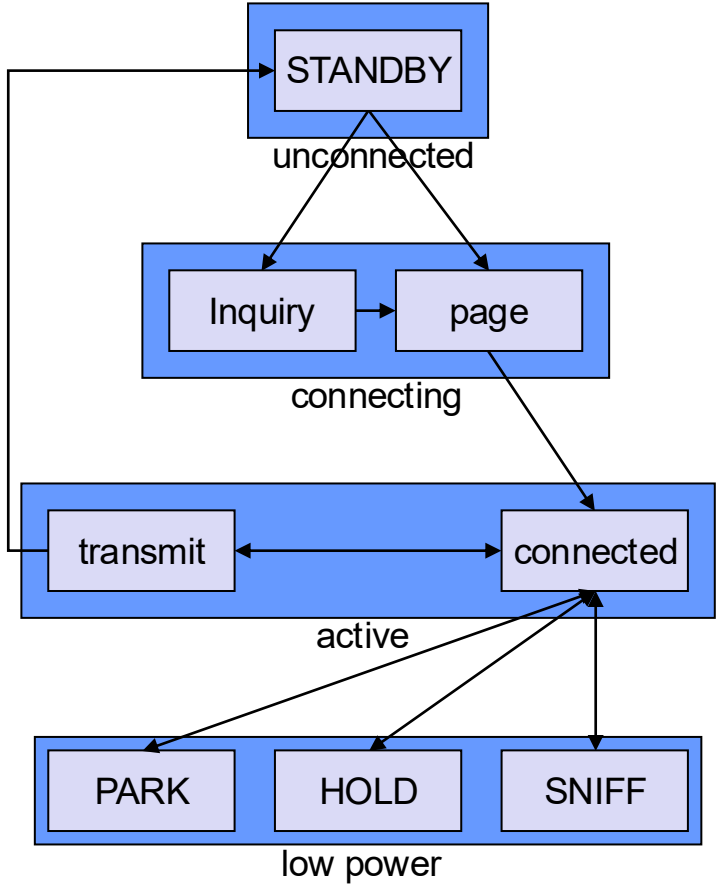

Bluetooth versions

- Version 1.0
  - was adopted in July 1999
- Version 1.1
  - Released with some expansions in December 2000
    - Up to 7 connections can be operated simultaneously
    - Added Received Signal Strength Indicator (RSSI)
  - Basis of the explanations in the class
- Version 1.2
  - Less sensitive to electromagnetic interference
    - Adaptive Frequency Jumping
      - Improves coexistence with Wi-Fi
      - Bad frequencies are taken out of jump sequence
    - „Same Channel Communication“
      - Consecutive time slots of a master and a slave transmit on the same frequency
      - Same quality for both
      - Frequency hopping 800 times per second

Bluetooth Versions (2)

- Version 2.0
  - Adopted in November 2004
    - "Enhanced Data Rate" (EDR) with approx. 3x speed
    - Phase modulation instead of (Gaussian) frequency modulation
    - Up to 50% less energy consumption
- Version 2.1
  - Adopted in August 2007
    - Secure Simple Pairing
    - Quality of service
- Version 3.0
  - Adopted in April 2009
    - Additional high-speed channel based on IEEE 802.11
    - Adjustment L2CAP necessary

Bluetooth Versions (3)

- Version 4.0
  - Adopted in December 2010
  - Energy-saving functions ("Bluetooth Low Energy"), not backwards compatible
  - Earlier Bluetooth architecture has been frozen as “Bluetooth Classic”

Bluetooth Summary

- Wireless Personal Area Networks
  - Networking of (small) devices in the immediate vicinity, vision "Ubiquitous Networks"
  - Limited range, energy, etc.
  - Autonomous networks
- Bluetooth
  - Frequency hopping (sequence and phase)
  - Piconet – Master, Slave
  - Scatter net – a combination of several piconnets
  - Inquiry, Paging

Exercises – Bluetooth

6.1 Name differences between WLANs and WPANs!

6.2 Describe the structure of a pico/scatter net!

6.3 What types of bridges between different piconets are there in a scatter net?

6.4 How does frequency hopping work in Bluetooth?

6.5 What is the difference between paging and inquiry? Describe the procedures!

6.6 What are the LMP operating modes?

References and further reading

- [6.1] J. Roth, Mobile Computing, dpunkt-Verlag, 2005
- [6.2] http://bluez.sourceforge.net/
- [6.3] B. A. Miller, C. Bisdikian, Bluetooth Revealed, Prentice Hall, 2002
- [6.4] What You Should Know About the ZigBee Alliance http://www.zigbee.org,
- [6.5] http://www.elektroniknet.de
- [6.6] http://www.lisha.ufsc.br/~guto/teaching/ish/ine5346-2003-1/work/bluetooth/hci_commands.html
- [6.7] Lecture "Ubiquitous Systems", http://www.teco.edu/lehre/#vorlesung
- [6.8] J. Schiller, Mobile Communications, Pearson Studies, 2003
- [6.9] NC State University, The Honey Bee Dance Language, http://www.cals.ncsu.edu/entomology/apiculture/PDF%20files/1.11.pdf
- [6.10] S. Farahani, ZigBee Wireless Networks and Transceivers, Newnes,2008
- [6.11] http://shapp.at/MN8